# TARJU

ART.NR:

- 96736-2
- 96737-2
- 96738-2

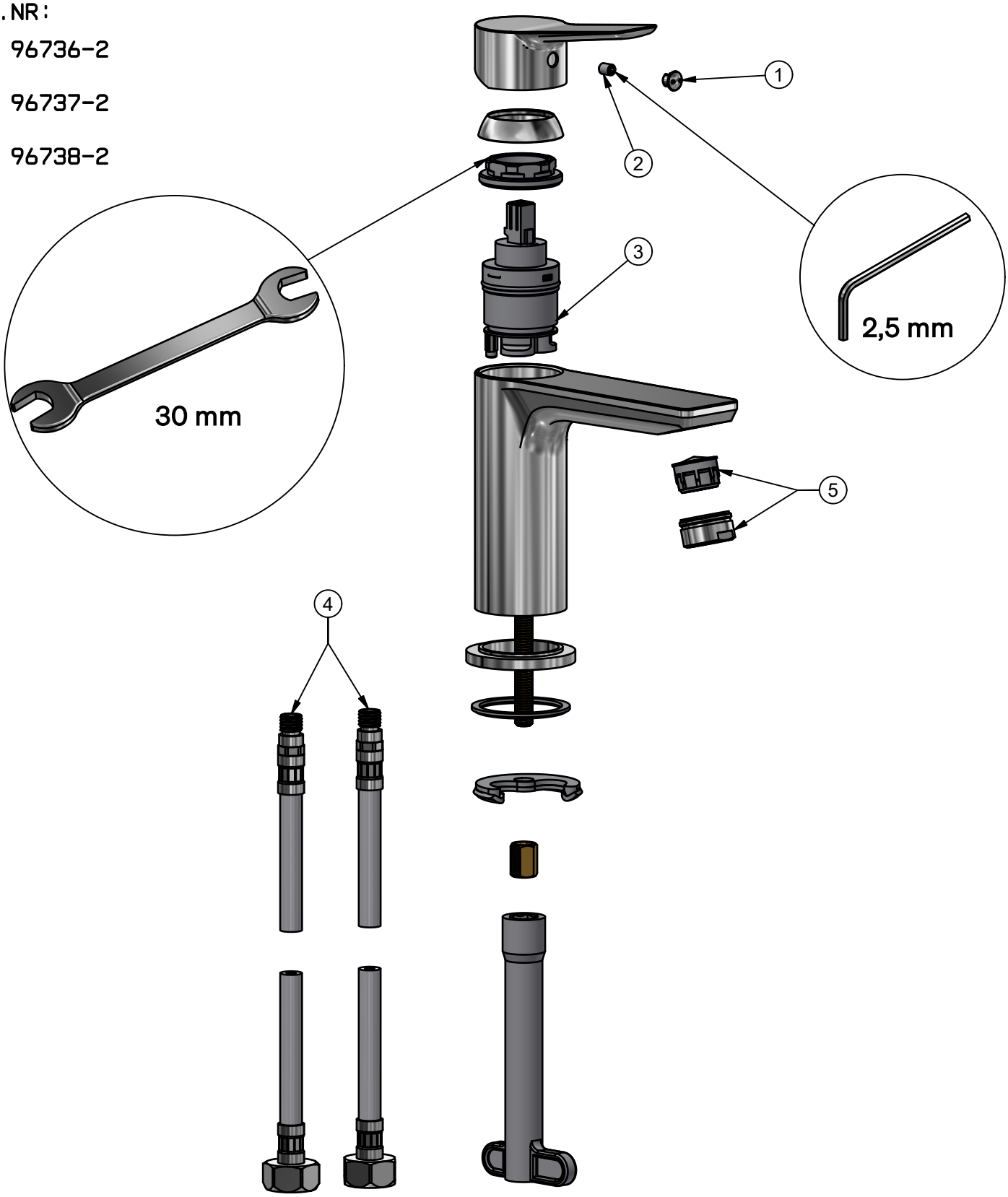


| Pos. | Ant. / Qty. | Titel / Title | Art.nr. Krom / Chrome: | Art.nr. Svart / Black: | Art.nr.Blyertssvart / Pencil black: |
|---|---|---|---|---|---|
| 1 | 1 | Täckhatt / Cover nut | | | |
| 2 | 1 | Insexskruv M5x7 / Inox screw M5x7 | | | |
| 3 | 1 | Keramisk insats kallstart / Ceramic cartridge with cold start | 99224 | 99224 | 99224 |
| 4 | 2 | Anslutningsslang par / Connection hose pair (SoftPex 3/8" L=440mm) | 95047 | 95047 | 95047 |
| 5 | 1 | Perlator 5L / Aerator 5L | 95029 | 95049 | 95050 |